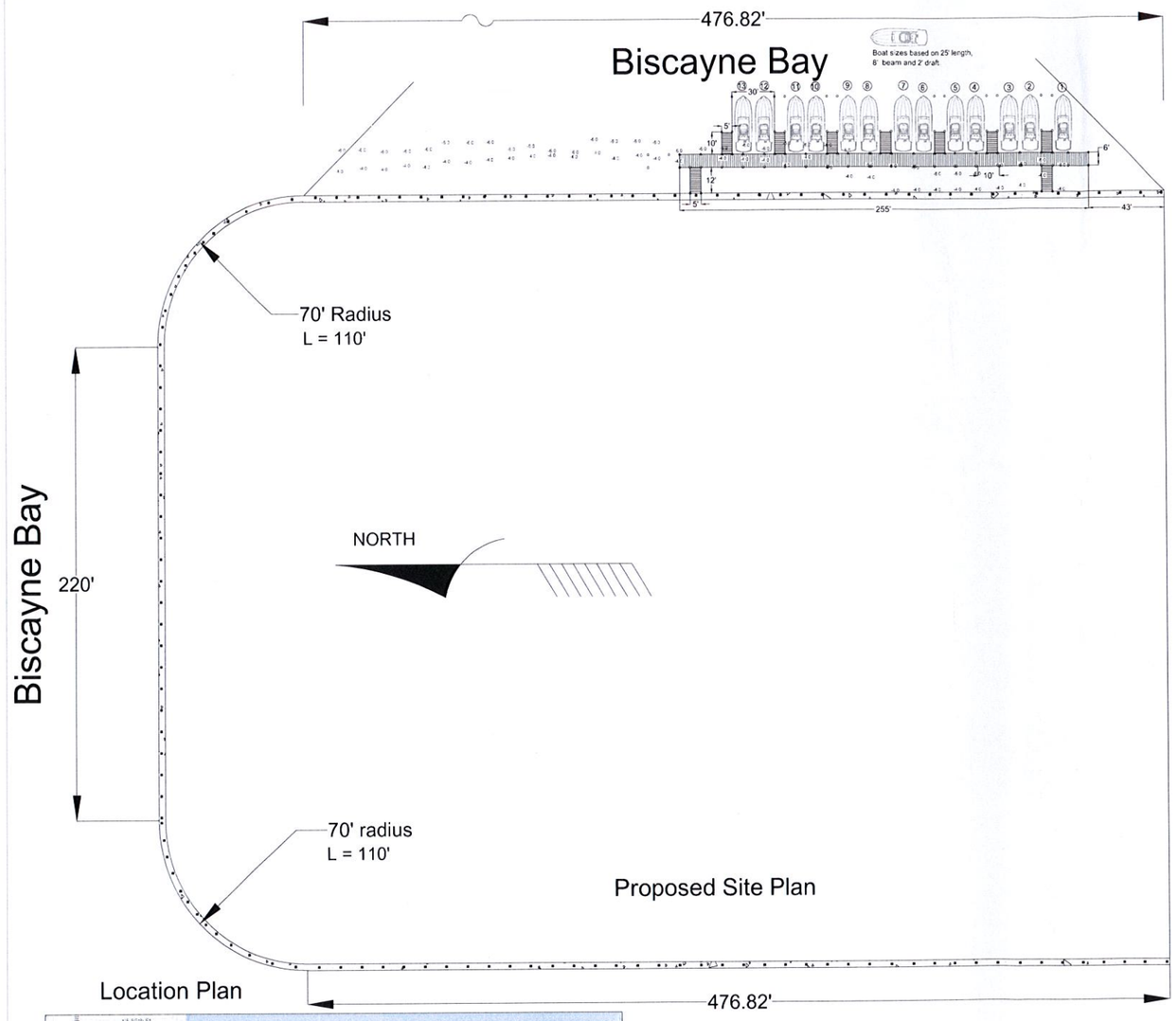

Proposed Site Plan

Location Plan

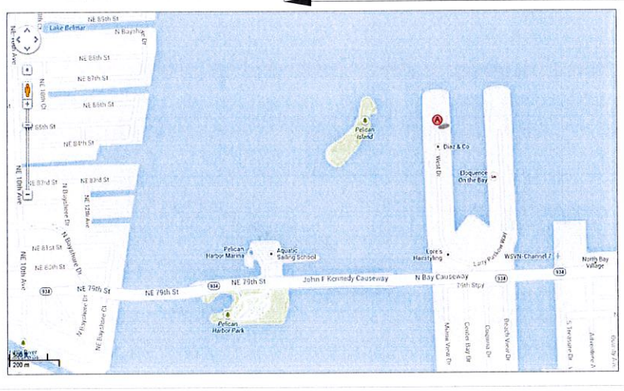

LUMBER NOTES:

1. All dim lumber shall be pressure treated with 0.40 CCA
2. All piles shall be 2.50 CCA
3. All hardware to be h.d. galv. or s.s. u.o.n.
4. All nails to be 16d galv. or #10 s.s. screws
5. Call 1-800-432-4770 prior to pile driving for utility locations.
6. Design per FBC 2010 - High Velocity Hurricane Zone

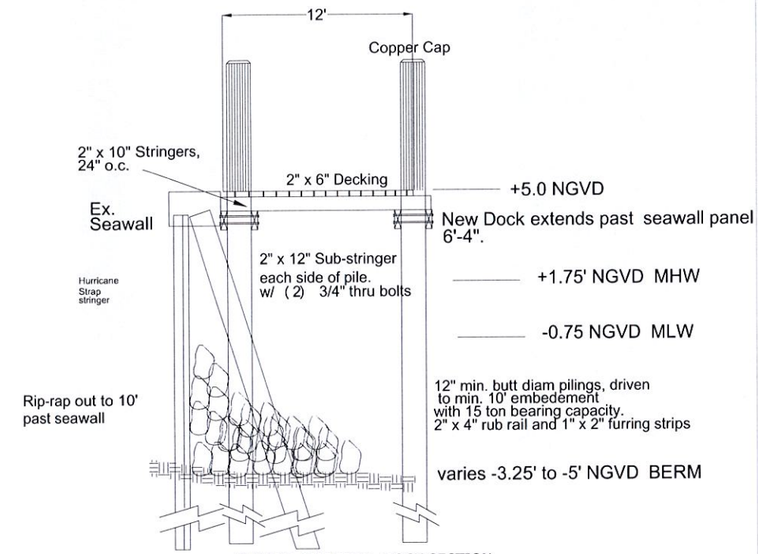

TYPICAL MARGINAL DOCK SECTION
N.T.S.

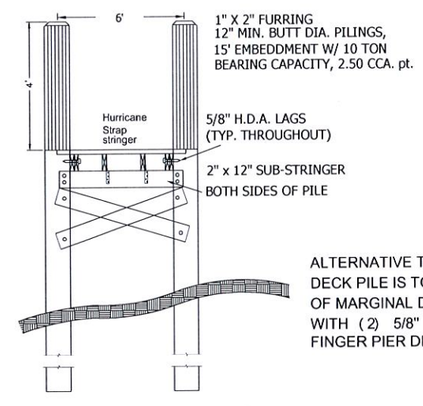

ALTERNATIVE TO ADDITIONAL CUT-OFF BELOW DECK PILE IS TO BOLT 3" X 10" HANGDOWN OFF OF MARGINAL DOCK DBL OUTSIDE STRINGER WITH (2) 5/8" THRU BOLTS AND CONNECT TO FINGER PIER DBL 2" X 10" SUBSTRINGER.

TYPICAL FINGER DOCK CROSS-SECTION
N.T.S.

Alan W. Garcia, P.E.

4202 NW 54th Street
Coconut Creek, FL 33073
USA
FLORIDA Reg. #42564

11-10-14P03:30 RCVD

NEW SEAWALL FOR 8000 WEST DRIVE
NORTH BAY VILLAGE, FLORIDA

Prepared For: Ray Qualmann Marine Construction

Drawing: 8000 West Drive NMB	
Description: Proposed Dock Site Plan	
Number: QM01-13	
Drawn By: AWG	Date: 9/16/2013
Designed By: AWG	Scale: As Noted
Approved By: AWG	Sheet: 1 of 1

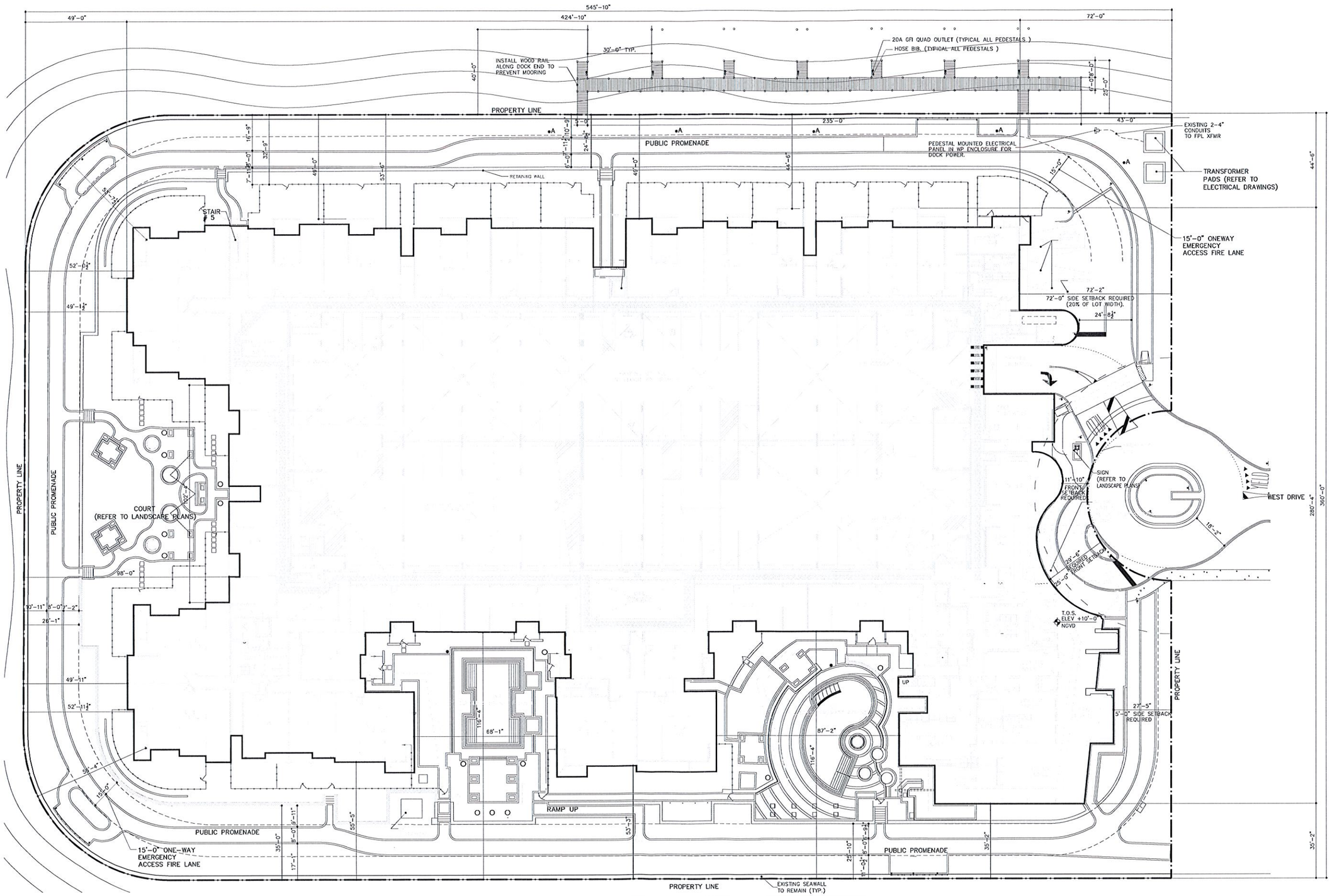

36" MIN. WIDE ACCESSIBLE ROUTE

NOTE:
"MINIMUM FINISH FLOOR ELEVATION SHALL BE ONE (1) FOOT ABOVE BASE FLOOD ELEVATION IN ACCORDANCE WITH CITY OF NORTH BAY VILLAGE CODE OF ORDINANCE – SECTION 154.31."

NOTE:
POOLS UNDER SEPARATE PERMIT. REFER TO HARDSCAPE DRAWING'S FOR MORE INFORMATION

SITE WORK, DOORS/WINDOWS AND ROOFING WILL REQUIRE SEPARATE PERMITS.

N

SITE PLAN
GROUND FLOOR PLAN

SCALE: 1"=20'-0"

REVISIONS	BY

BLU AT NORTH BAY VILLAGE

FOR:
ZF DEVELOPMENT
LOCATED AT:
8000 WEST DRIVE NORTH BAY VILLAGE, FLORIDA

MSA ARCHITECTS, INC.
MIAMI OFFICE
7695 SW 104th ST.
SUITE 100
MIAMI, FLORIDA 33156
(305) 273-9911
HOLLYWOOD OFFICE
303 SOUTH 21st AVE.
HOLLYWOOD, FLORIDA 33020
(954) 925-6030
AA C000895
AR 0013085

MSA ARCHITECTS
ARCHITECTURE & PLANNING

COPYRIGHT © 2012 MSA ARCHITECTS, INC. THE ARCHITECTURAL DESIGN AND DETAIL DRAWINGS FOR THIS BUILDING AND/OR OVERALL PROJECT ARE THE LEGAL PROPERTY OF AND ALL RIGHTS ARE RESERVED BY THE ARCHITECT. THEIR USE FOR REPRODUCTION, CONSTRUCTION, OR DISTRIBUTION IS PROHIBITED UNLESS AUTHORIZED IN WRITING BY THE ARCHITECT.

DRAWN	RAN
CHECKED	–
DATE	11/15/2012
SCALE	AS SHOWN
JOB NO.	1506.PRJ
SHEET	1506-SP-1.DWG

SP-1

OF SHEETS

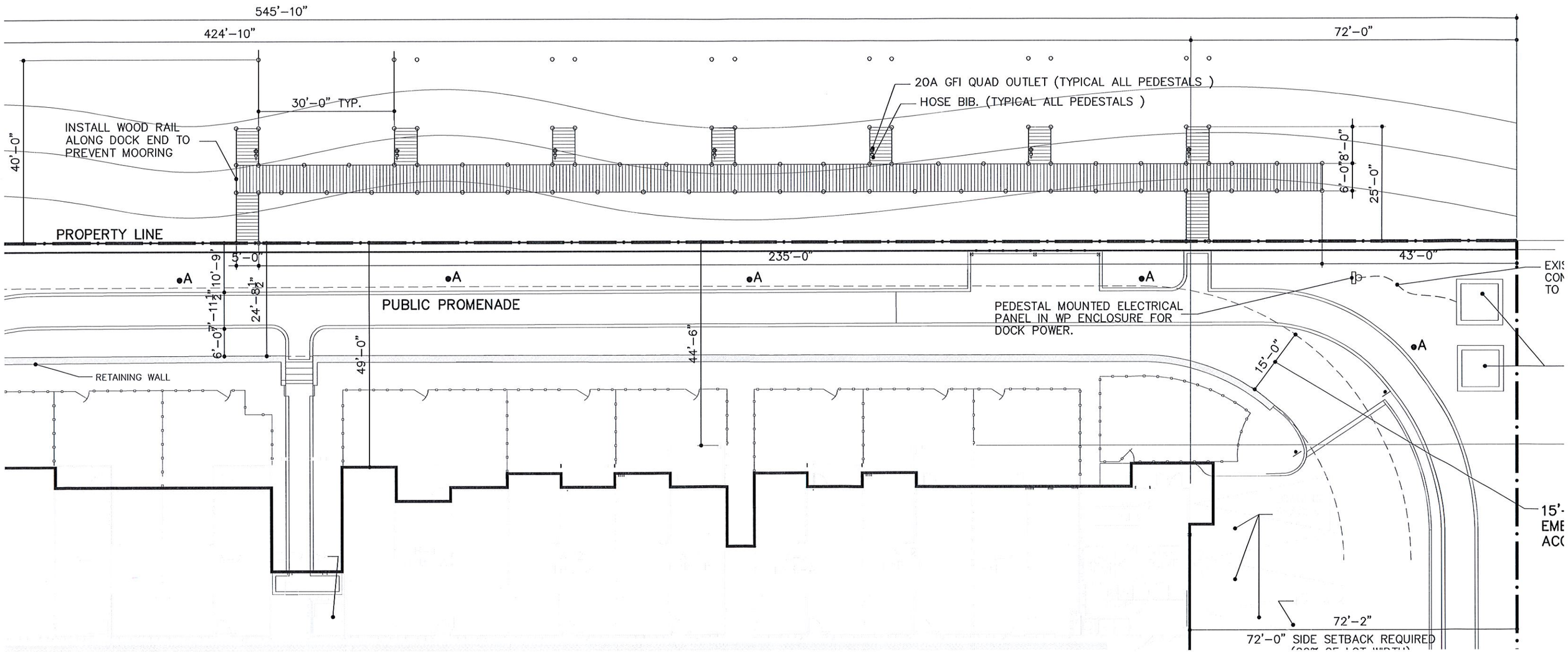
545'-10"
424'-10"
72'-0"
30'-0" TYP.
20A GFI QUAD OUTLET (TYPICAL ALL PEDESTALS)
HOSE BIB. (TYPICAL ALL PEDESTALS)
INSTALL WOOD RAIL ALONG DOCK END TO PREVENT MOORING
40'-0"
6'-0"
8'-0"
25'-0"
PROPERTY LINE
5'-0"
235'-0"
43'-0"
10'-9"
6'-0"
11 1/2"
24'-8 1/2"
PUBLIC PROMENADE
49'-0"
44'-6"
PEDESTAL MOUNTED ELECTRICAL PANEL IN WP ENCLOSURE FOR DOCK POWER.
15'-0"
RETAINING WALL
72'-2"
72'-0" SIDE SETBACK REQUIRED

LOCATION ON SITE AS SHOWN
MAIN 200A MAIN

NEMA 4X
PANEL "D"

120/ 208V. 3 ø 4 W.
A/C RATING 42K
MOUNT: SURFACE

	CKT	SERVES	C.B.	P	K.V.A.	WIRE-COND	CKT	SERVES	C.B.	P	K.V.A.	WIRE-COND	
(*)	1	PEDESTAL QUAD	20	1	Ø.5	*10 - 3/4" C	2	PEDESTAL QUAD	20	1	Ø.5	*10 - 3/4" C	
	3	PEDESTAL QUAD	20	1	Ø.5	*10 - 3/4" C	4	PEDESTAL QUAD	20	1	Ø.5	*8 - 1" C	
	5	PEDESTAL QUAD	20	1	Ø.5	*10 - 3/4" C	6	PEDESTAL QUAD	20	1	Ø.5	*8 - 1" C	
	7	PEDESTAL QUAD	20	1	Ø.5	*10 - 3/4" C	8	SERVICE RECEPT.	20	1	Ø.5	*8 - 1" C	
	9	SPACE	-	-	-	-	10	PEDESTAL LIGHTING	20	1	Ø.5	*8 - 1" C	(*)
	11	SPACE	-	-	-	-	12	SPACE	-	-	-	-	
	13	SPACE	-	-	-	-	14	SPACE	-	-	-	-	
	15	SPACE	-	-	-	-	16	SPACE	-	-	-	-	
	17	SPACE	-	-	-	-	18	SPACE	-	-	-	-	

CONNECTED K.V.A. = 36.3 TOTAL AMPS = SEE CALCALATION

FEEDER : SEE RISER (*) THRU TIME CLOCK

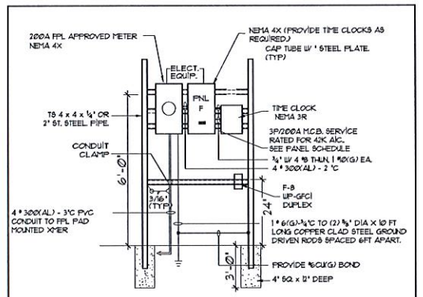

ELECTRICAL RISER DIAGRAM & STAND FOR PNL "D" SHOWN ON SITE

NTS

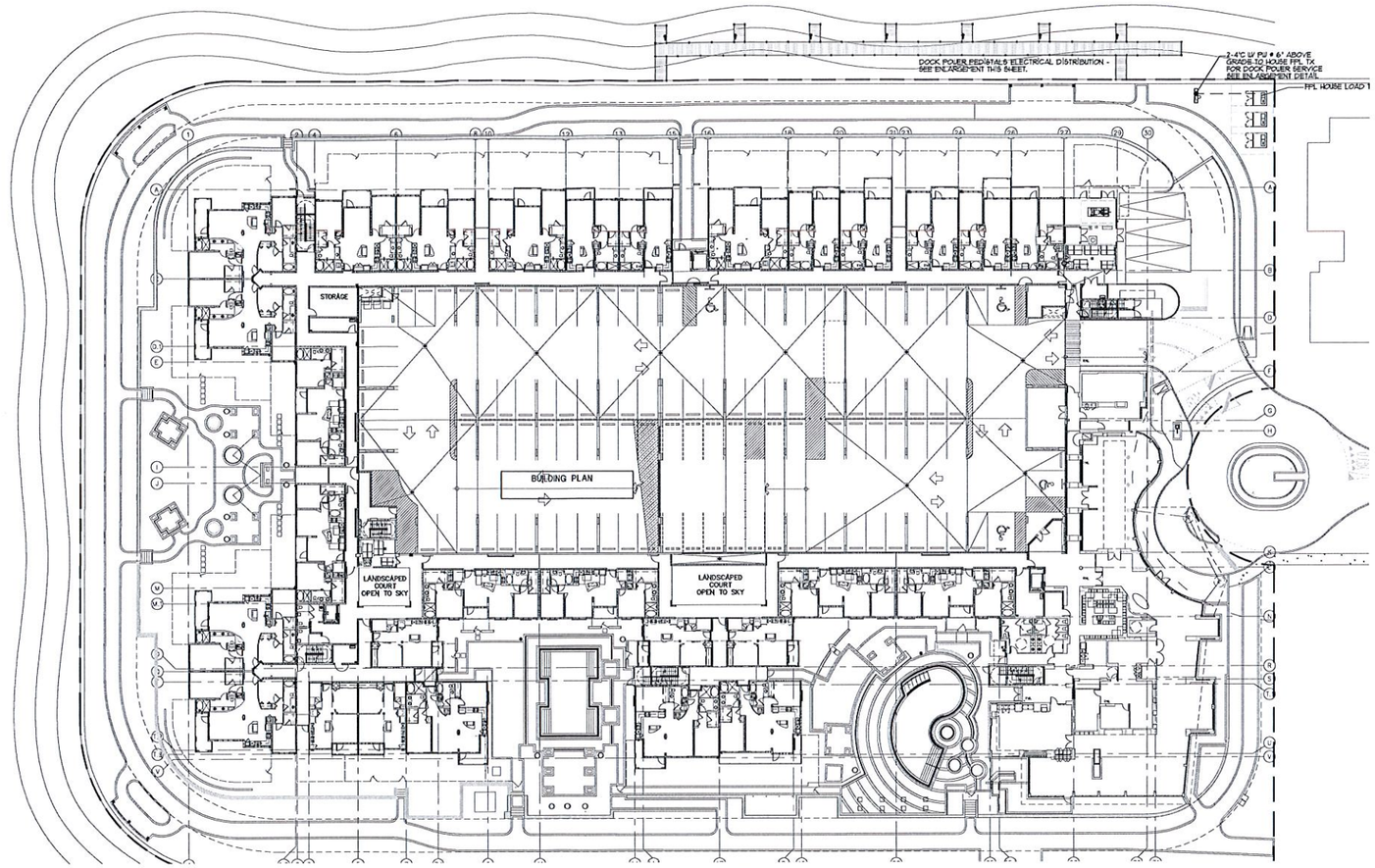

OVERALL SITE REFERENCE FOR ELECTRICAL AT DOCK

SCALE: 1/30"=1'-0"

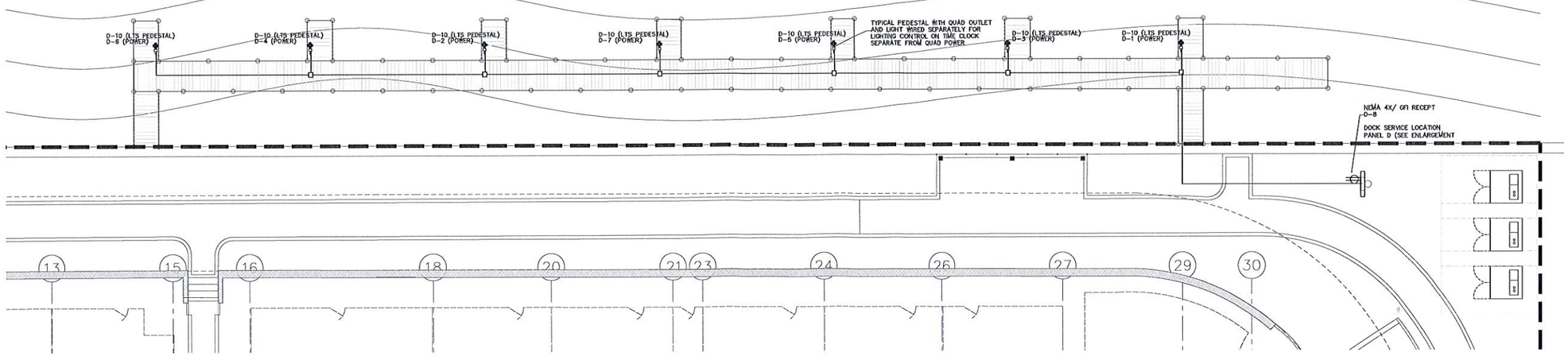

DOCK PEDESTALS ELECTRICAL PLAN

SCALE: 3/32"=1'-0"

REVISIONS	BY
NEW SHEET 8-1-14	

BLU AT NORTH BAY VILLAGE
FOR:
ZF DEVELOPMENT
LOCATED AT:
800 WEST DRIVE NORTH BAY VILLAGE, FLORIDA

FRANYIE ENGINEERS INC.

Certificate of Authorization # 00002908

ANTONIO FRANYIE PE # 11640 MECH
VIVIANA FRANYIE PE # 49955 MECH

10610 N.W. 27 Street, Miami FL 33172
T:(305)592-1350 F:(305)594-9279
www.franyieengineers.com

JOB NUMBER	12-199
DATE	3/23/2013

PERMIT SET
4/22/2013

Nov 7 2014

DRAWN	-
CHECKED	-
DATE	-
SCALE	AS SHOWN
JOB NO.	-
SHEET	

E-1.0

OF SHEETS

P:\PROJECTS\2012\MSA\12-199 Blu @ N. Bay Village\Blu@NBV-E-1.0 Dock plan.dwg, 11/7/2014 5:15:43 PM, DWG To PDF.pc3

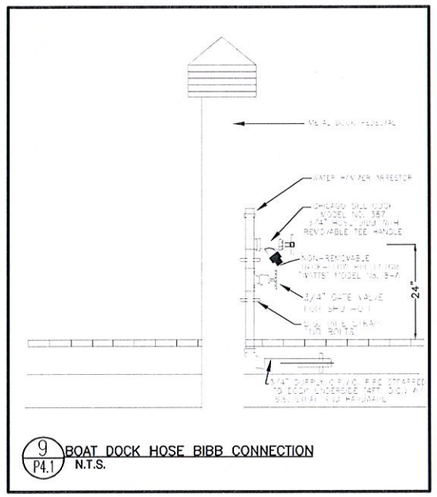

9 P4.1 BOAT DOCK HOSE BIBB CONNECTION
N.T.S.

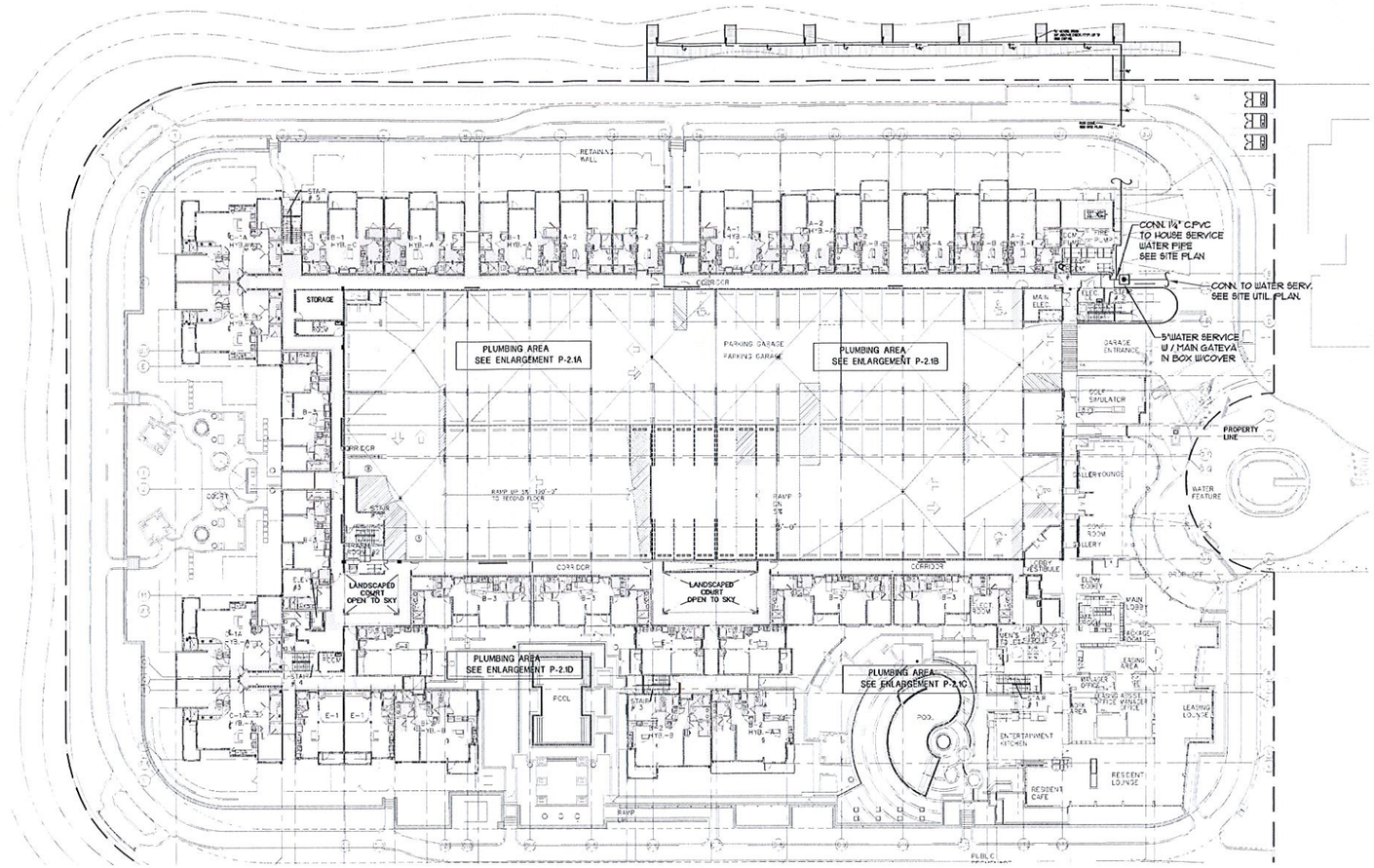

2 OVERALL SITE REFERENCE FOR PLUMBING AT DOCK
SCALE: 1/30"=1'-0"

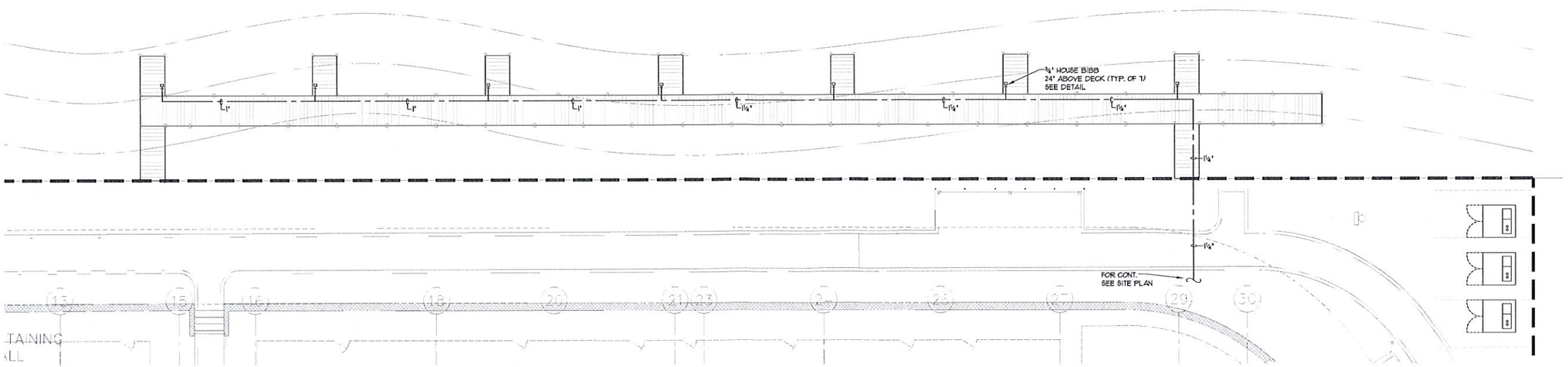

2 DOCK PEDESTALS WATER PLAN
SCALE: 3/32"=1'-0"

REVISIONS	BY
1 COUNTY COMMENTS 01-24-13	AF
1 COURT REV 11-16-13	AF

BLU AT NORTH BAY VILLAGE
FOR:
ZF DEVELOPMENT
LOCATED AT:
800 WEST DRIVE NORTH BAY VILLAGE, FLORIDA

FRANYIE ENGINEERS INC.
Certificate of Authorization # 00002906
ANTONIO FRANYIE PE # 11640 MECH
VIVIANA FRANYIE PE # 49985 MECH
10510 NW 27 Street, Miami FL 33172
T:(305)592-1360 F:(305)594-3279
www.franyieengineers.com

JOB NUMBER	2-188
DATE	3/13/2013

PERMIT SET
4/22/2013

Nov 7 2014

DRAWN	-
CHECKED	-
DATE	-
SCALE	AS SHOWN
JOB NO.	-
SHEET	

P-1.0

OF SHEETS